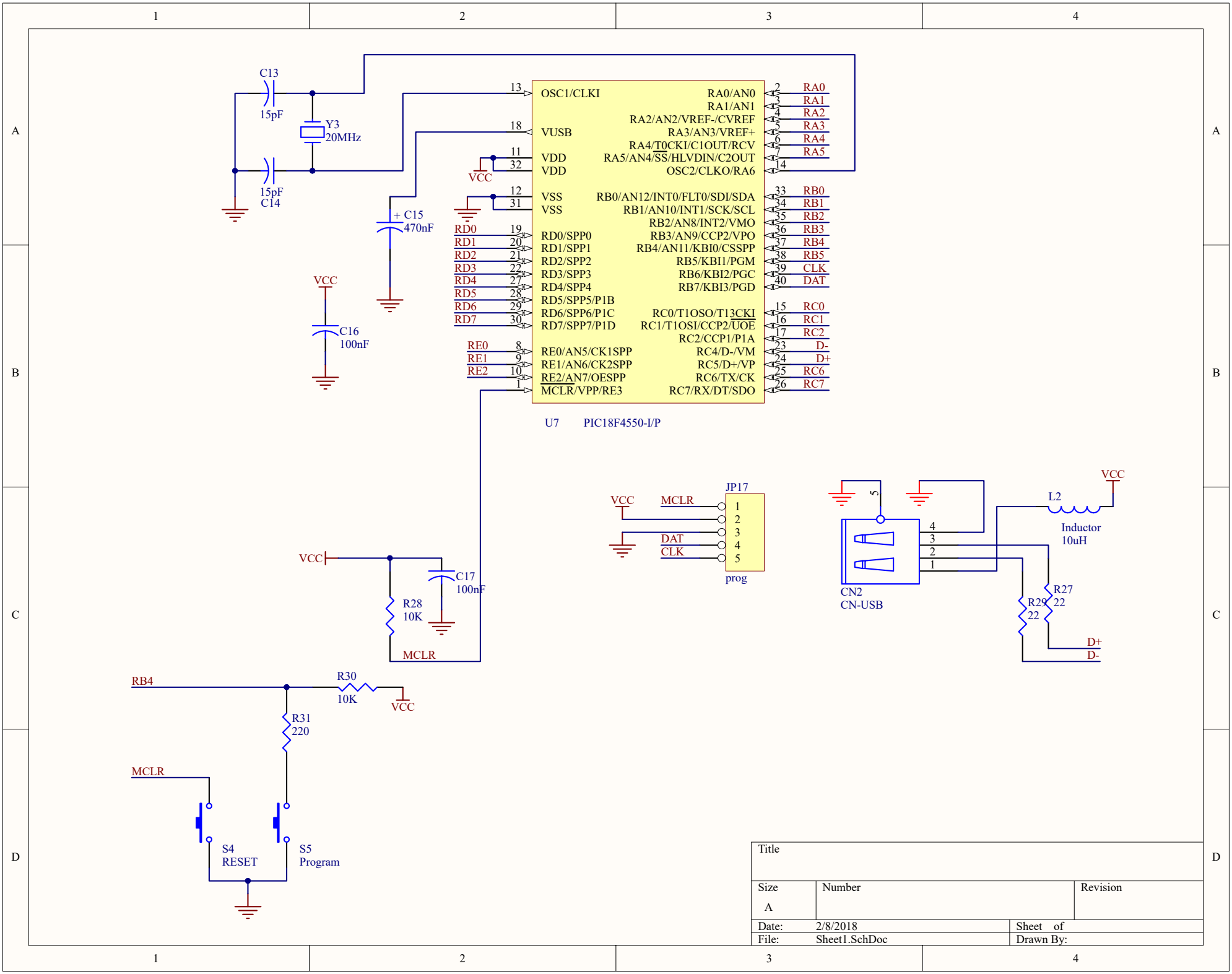
C13
15pF
Y3
20MHz
15pF
C14
+ C15
470nF
VCC
C16
100nF
OSC1/CLKI
VUSB
VDD
VDD
VSS
VSS
RD0/SPP0
RD1/SPP1
RD2/SPP2
RD3/SPP3
RD4/SPP4
RD5/SPP5/P1B
RD6/SPP6/P1C
RD7/SPP7/P1D
RE0/AN5/CK1SPP
RE1/AN6/CK2SPP
RE2/AN7/OESPP
MCLR/VPP/RE3
RA0/AN0
RA1/AN1
RA2/AN2/VREF-/CVREF
RA3/AN3/VREF+
RA4/T0CKI/C1OUT/RCV
RA5/AN4/SS/HLVDIN/C2OUT
OSC2/CLKO/RA6
RB0/AN12/INT0/FLT0/SDI/SDA
RB1/AN10/INT1/SCK/SCL
RB2/AN8/INT2/VMO
RB3/AN9/CCP2/VPO
RB4/AN11/KBI0/CSSPP
RB5/KBI1/PGM
RB6/KBI2/PGC
RB7/KBI3/PGD
RC0/T1OSO/T13CKI
RC1/T1OSI/CCP2/UOE
RC2/CCP1/P1A
RC4/D-/VM
RC5/D+/VP
RC6/TX/CK
RC7/RX/DT/SDO
U7 PIC18F4550-I/P
RA0
RA1
RA2
RA3
RA4
RA5
RB0
RB1
RB2
RB3
RB4
RB5
CLK
DAT
RC0
RC1
RC2
D-
D+
RC6
RC7
RD0
RD1
RD2
RD3
RD4
RD5
RD6
RD7
RE0
RE1
RE2
VCC
C17
100nF
R28
10K
MCLR
JP17
MCLR
DAT
CLK
prog
CN2
CN-USB
L2
Inductor
10uH
R27
22
R29
22
D+
D-
RB4
R30
10K
R31
220
MCLR
S4
RESET
S5
Program
Title
Size
A
Number
Revision
Date: 2/8/2018
Sheet of
File: Sheet1.SchDoc
Drawn By: